JUMO GmbH & Co. KG
Delivery address: Mackenrodtstraße 14
36039 Fulda, Germany
Postal address: 36035 Fulda, Germany
Phone: +49 661 6003-0
Fax: +49 661 6003-607
Email: mail@jumo.net
Internet: www.jumo.net

JUMO UK LTD
JUMO House
Temple Bank, Riverway
Harlow, Essex, CM20 2DY, UK
Phone: +44 1279 63 55 33
Fax: +44 1279 62 50 29
Email: info.uk@jumo.net
Internet: www.jumo.co.uk

JUMO Process Control, Inc.
6724 Joy Road
East Syracuse, NY 13057, USA
Phone: +1 315 437 5866
Fax: +1 315 437 5860
Email: info.us@jumo.net
Internet: www.jumousa.com

JUMO ZELOS C01 LS

Capacitive level switch

Areas of application

- Food and beverage industry
- Railway applications, according to DIN EN 50155
- Shipbuilding/shipyards
- Mechanical and plant engineering
- Water and wastewater

Type 408401

Special features

- Suitable for CIP and SIP processes
- High pressure resistance and medium temperature
- Minimization of downtimes due to firmware update profile
- Standard torque wrench SW22 usable

Type 408401

Description

The capacitive level switch measures the point level of solid and liquid media in applications with requirements for overfill and dry run protection and can also be used for media detection, e.g. in separation and cleaning processes.

The device is suitable for installation in pressurized tanks, pipelines, containers, in hygienic areas and as part of overfill protection systems according to WHG and can be used in explosion-proof areas.

IO-Link

JUMO GmbH & Co. KG
Delivery address: Mackenrodtstraße 14
36039 Fulda, Germany
Postal address: 36035 Fulda, Germany
Phone: +49 661 6003-0
Fax: +49 661 6003-607
Email: mail@jumo.net
Internet: www.jumo.net

JUMO UK LTD
JUMO House
Temple Bank, Riverway
Harlow, Essex, CM20 2DY, UK
Phone: +44 1279 63 55 33
Fax: +44 1279 62 50 29
Email: info.uk@jumo.net
Internet: www.jumo.co.uk

JUMO Process Control, Inc.
6724 Joy Road
East Syracuse, NY 13057, USA
Phone: +1 315 437 5866
Fax: +1 315 437 5860
Email: info.us@jumo.net
Internet: www.jumousa.com

Approval marks and certificates

Observe "Special conditions for safe use" in hazardous areas.
Certificates for approved device versions are available for download on the manufacturer's website.
EHEDG conformity only in conjunction with EHEDG-approved process connections, ⇨ page 10.

Submitted:

EN 50155

Technical data

Ex identification markings

ATEX, intrinsically safe, Ex i	II 1 G Ex ia IIC T4 Ga II 1/3 D Ex ta/tc IIIC T_{200} 145 °C Da/Dc
IECEx, intrinsically safe, Ex i	Ex ia IIC T4 Ga Ex ta/tc IIIC T_{200} 145 °C Da/Dc

Electrical safety

Requirements	DIN EN 61010-1:2023 The device must be equipped with an electrical circuit that meets the requirements for "Limited-energy circuits".
Test voltage (type testing) (measuring circuit against housing)	AC 1848 V, 1 min.

JUMO GmbH & Co. KG
Delivery address: Mackenrodtstraße 14
36039 Fulda, Germany
Postal address: 36035 Fulda, Germany
Phone: +49 661 6003-0
Fax: +49 661 6003-607
Email: mail@jumo.net
Internet: www.jumo.net

JUMO UK LTD
JUMO House
Temple Bank, Riverway
Harlow, Essex, CM20 2DY, UK
Phone: +44 1279 63 55 33
Fax: +44 1279 62 50 29
Email: info.uk@jumo.net
Internet: www.jumo.co.uk

JUMO Process Control, Inc.
6724 Joy Road
East Syracuse, NY 13057, USA
Phone: +1 315 437 5866
Fax: +1 315 437 5860
Email: info.us@jumo.net
Internet: www.jumousa.com

Electrical data

Voltage supply	DC 24 V SELV
PNP, NPN, push-pull	DC 9.6 to 36 V
IO-Link	DC 18 to 30 V
Explosion protection Ex i	DC 9.6 to 30 V
Current consumption[a]	
Idle mode	0.45 W
Switch operation with 2 outputs	15 W
IO-Link operation	
Without switching output	0.6 W
With one switching output	7 W
Protection class	3
Overvoltage category	II
Pollution degree	2
Electrical connection	
Connection elements	
Device	M12 plug connector
M12 plug connector	IEC 61076-2-101
Version	4-pole
Connecting cable	
Version	4-core, copper
Cable length	≤ 20 m
Temperature resistance	≥ 80 °C

[a] The device labeling indicates a maximum power consumption in switching mode with 2 outputs including self-consumption. The actual power consumption depends on the connected load.

Inputs

Hysteresis	±1 mm
Repeatability	±1 mm
Switch-on delay	< 2 s, during this time the switching outputs are blocked
Switching delay	Adjustable 0.3 to 60 s
When the sensor is covered	0.5 s
When the sensor is uncovered	1 s
Filter time constant	Adjustable 0 to 100 s

JUMO GmbH & Co. KG
Delivery address: Mackenrodtstraße 14
36039 Fulda, Germany
Postal address: 36035 Fulda, Germany
Phone: +49 661 6003-0
Fax: +49 661 6003-607
Email: mail@jumo.net
Internet: www.jumo.net

JUMO UK LTD
JUMO House
Temple Bank, Riverway
Harlow, Essex, CM20 2DY, UK
Phone: +44 1279 63 55 33
Fax: +44 1279 62 50 29
Email: info.uk@jumo.net
Internet: www.jumo.co.uk

JUMO Process Control, Inc.
6724 Joy Road
East Syracuse, NY 13057, USA
Phone: +1 315 437 5866
Fax: +1 315 437 5860
Email: info.us@jumo.net
Internet: www.jumousa.com

Outputs

Number	
For IO-Link operation	1 (output signal according to IO-Link communication standard version 1.1)
For switching operation	2 (SIO mode; SIO = standard IO)
With PNP, NPN, push-pull	2
Configuration options	Hysteresis or window function, switching function, NC contact or NO contact, output p-switching (PNP) or n-switching (NPN), switch-on and switch-off delay, pulse-width modulation (PWM), wet test with medium
Pulse-width modulation (PWM)	
Period duration adjustable	50 to 1000 ms
Mark-to-space ratio	0 to 100 %
Switching current	≤ 200 mA per output
Voltage drop at switching transistor	≤ 1 V
Short-circuit resistance	Yes (clocked)
Reverse voltage protection	Yes
Current limiting	Yes

Interfaces

IO-Link

Function	Transfer of process data, diagnosis data, configuration data, and device information, displaying of process values
Communication	Via end device with IO-Link master and device description file (IODD)
Communication interface	IO-Link-Device V 1.1
Data transfer rate (baud rate)	COM 3 (230.4 kBaud)
Cycle time	≥ 0.7 ms
Profile	Common Profile, Smart Sensor Profile, Firmware Update Profile

Display

Color display	According to NE107, IO-Link, customer-specific
Brightness	4 levels (configurable)
Self-diagnosis/self-monitoring	According to NE107 and VDI/VDE 2650

JUMO GmbH & Co. KG
Delivery address: Mackenrodtstraße 14
36039 Fulda, Germany
Postal address: 36035 Fulda, Germany
Phone: +49 661 6003-0
Fax: +49 661 6003-607
Email: mail@jumo.net
Internet: www.jumo.net

JUMO UK LTD
JUMO House
Temple Bank, Riverway
Harlow, Essex, CM20 2DY, UK
Phone: +44 1279 63 55 33
Fax: +44 1279 62 50 29
Email: info.uk@jumo.net
Internet: www.jumo.co.uk

JUMO Process Control, Inc.
6724 Joy Road
East Syracuse, NY 13057, USA
Phone: +1 315 437 5866
Fax: +1 315 437 5860
Email: info.us@jumo.net
Internet: www.jumousa.com

Environmental influences

Resistance to climatic conditions	
Operation	100 % relative humidity including condensation on the device outer case
Storage	90 % relative humidity without condensation
Ambient temperature	
M12 plug connector	-40 to +85 °C
Storage temperature	-40 to +80 °C
Process temperature	
Parts in contact with the medium	-40 to +115 °C (standard) (CIP/SIP processes: max. 135 °C for < 1 h/d and T_{amb} < 60 °C) -40 to +200 °C (for versions with sliding connection)
Process pressure	-1 to +60 bar
Protection type	DIN EN 60529
M12 plug connector	IP67, IP68[a] (10 m, 240 h), IP69
Max. site altitude	5300 m above sea level
Electromagnetic compatibility (EMC)	DIN EN 61326-2-3:2022
Interference emission	Class B[b]
Interference immunity	Industrial requirement
Vibration resistance	IEC 60068-2-6, DIN EN 61373, DIN EN 50155, category 1 B
Endurance limit	4 g at 25 to 100 Hz
Shock resistance	3 g (vertical) or 5 g (transverse and longitudinal) for 30 ms
Operating location according to UL approval	Indoors

[a] Only in conjunction with connection cable, ⇨ chapter "Accessories", Page 15.
[b] The product is suitable for industrial use as well as for households and small businesses.

For process temperatures of standard variants -40 to +115 °C, the following relationship between ambient and process temperature applies:

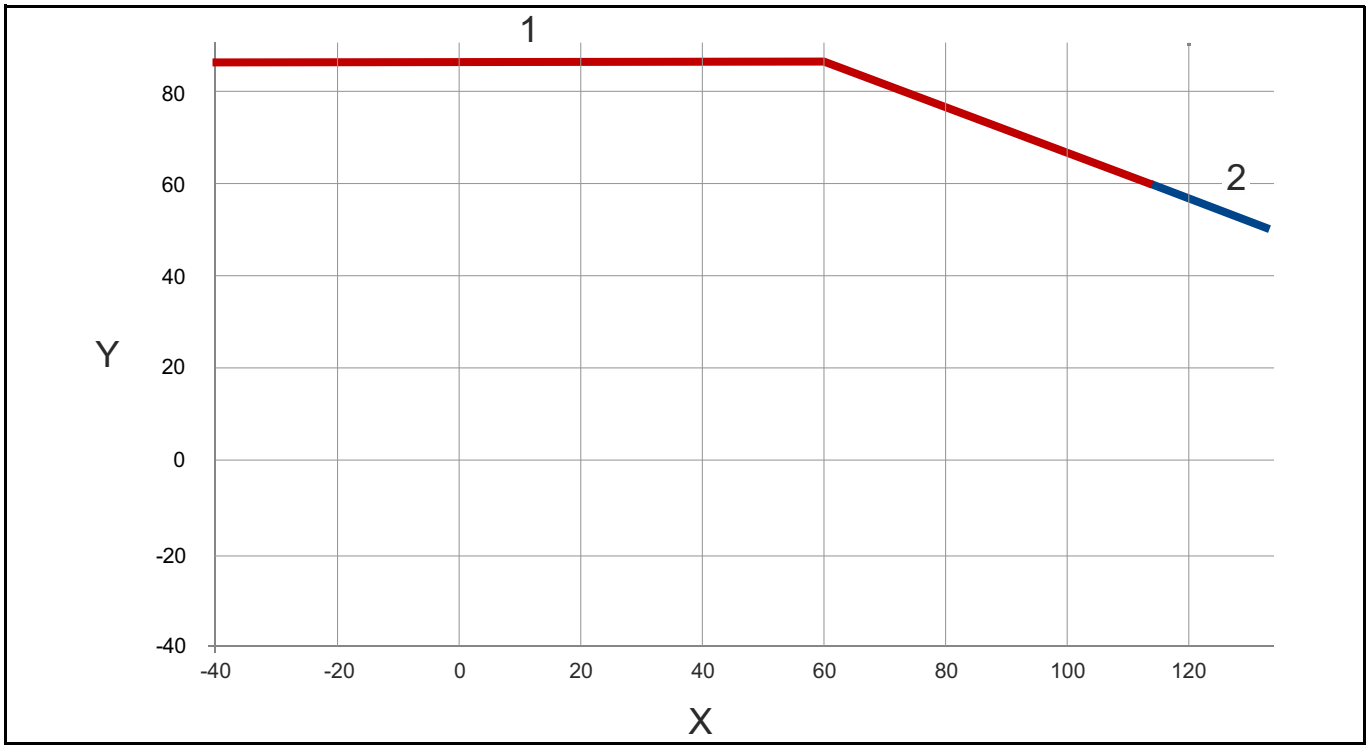

X	Process temperature	1	Permissible temperature range
Y	Maximum ambient temperature	2	Max. 1 h (CIP/SIP)

JUMO GmbH & Co. KG
Delivery address: Mackenrodtstraße 14
36039 Fulda, Germany
Postal address: 36035 Fulda, Germany
Phone: +49 661 6003-0
Fax: +49 661 6003-607
Email: mail@jumo.net
Internet: www.jumo.net

JUMO UK LTD
JUMO House
Temple Bank, Riverway
Harlow, Essex, CM20 2DY, UK
Phone: +44 1279 63 55 33
Fax: +44 1279 62 50 29
Email: info.uk@jumo.net
Internet: www.jumo.co.uk

JUMO Process Control, Inc.
6724 Joy Road
East Syracuse, NY 13057, USA
Phone: +1 315 437 5866
Fax: +1 315 437 5860
Email: info.us@jumo.net
Internet: www.jumousa.com

Mechanical features

Materials	
Parts in contact with the medium	
Process connection	PEEK (depending on sealing concept stainless steel 316 L)
Sliding connection 360, 361	PEEK, FKM/FPM, stainless steel 316 L
Parts not in contact with the medium	
Housing	Stainless steel 304
Surface roughness	$R_a \leq 0.8$ µm
Installation position	Any
Weight	60 g for G 1/2 with M12 plug connector

JUMO GmbH & Co. KG
Delivery address: Mackenrodtstraße 14
36039 Fulda, Germany
Postal address: 36035 Fulda, Germany
Phone: +49 661 6003-0
Fax: +49 661 6003-607
Email: mail@jumo.net
Internet: www.jumo.net

JUMO UK LTD
JUMO House
Temple Bank, Riverway
Harlow, Essex, CM20 2DY, UK
Phone: +44 1279 63 55 33
Fax: +44 1279 62 50 29
Email: info.uk@jumo.net
Internet: www.jumo.co.uk

JUMO Process Control, Inc.
6724 Joy Road
East Syracuse, NY 13057, USA
Phone: +1 315 437 5866
Fax: +1 315 437 5860
Email: info.us@jumo.net
Internet: www.jumousa.com

Dimensions

Device

M12 plug connector

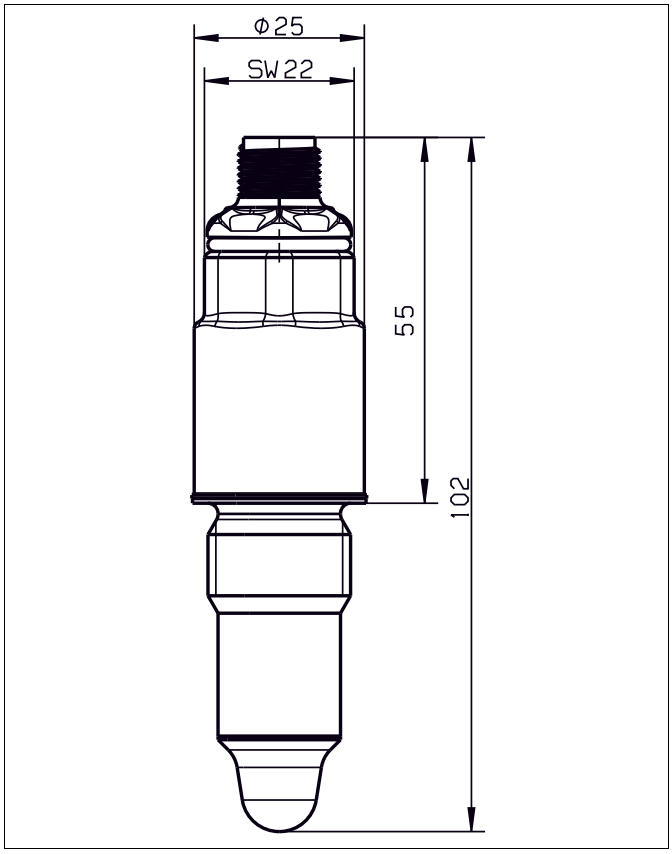

JUMO GmbH & Co. KG
Delivery address: Mackenrodtstraße 14
36039 Fulda, Germany
Postal address: 36035 Fulda, Germany
Phone: +49 661 6003-0
Fax: +49 661 6003-607
Email: mail@jumo.net
Internet: www.jumo.net

JUMO UK LTD
JUMO House
Temple Bank, Riverway
Harlow, Essex, CM20 2DY, UK
Phone: +44 1279 63 55 33
Fax: +44 1279 62 50 29
Email: info.uk@jumo.net
Internet: www.jumo.co.uk

JUMO Process Control, Inc.
6724 Joy Road
East Syracuse, NY 13057, USA
Phone: +1 315 437 5866
Fax: +1 315 437 5860
Email: info.us@jumo.net
Internet: www.jumousa.com

Process connections

G 3/4

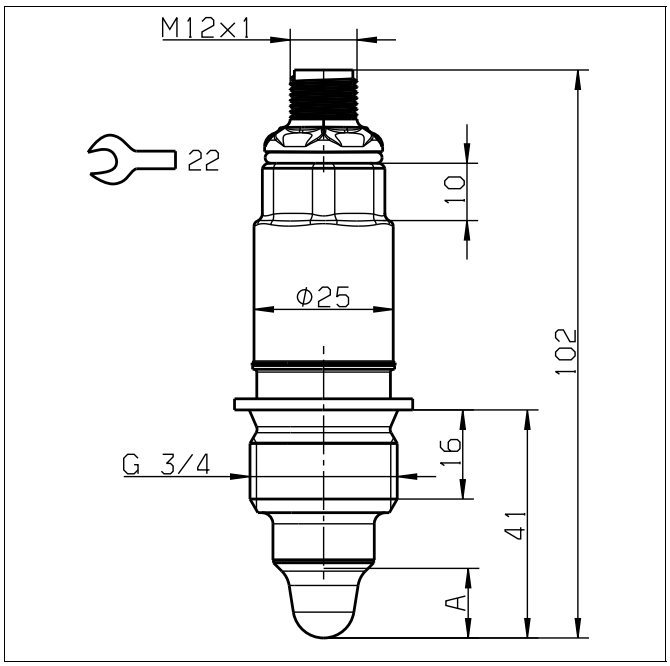

A Immersion depth, PEEK tip 12.5 mm

M24 × 1.5

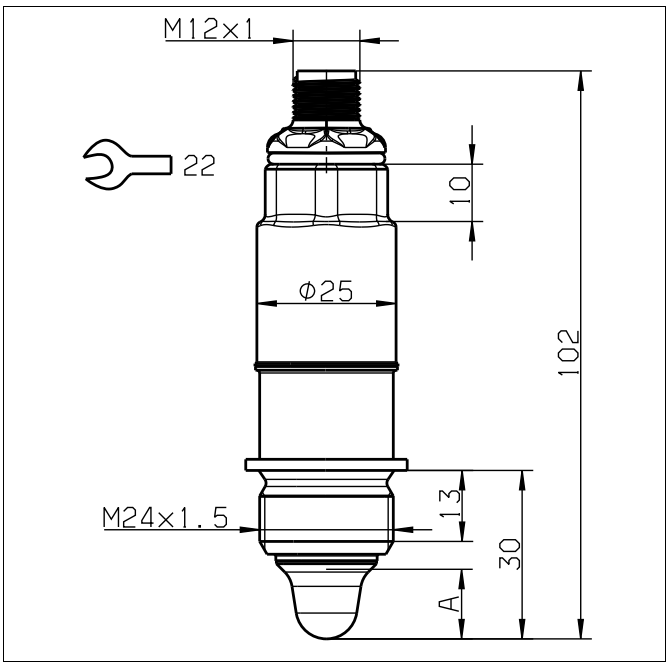

A Immersion depth, PEEK tip 12.5 mm

JUMO GmbH & Co. KG
Delivery address: Mackenrodtstraße 14
36039 Fulda, Germany
Postal address: 36035 Fulda, Germany
Phone: +49 661 6003-0
Fax: +49 661 6003-607
Email: mail@jumo.net
Internet: www.jumo.net

JUMO UK LTD
JUMO House
Temple Bank, Riverway
Harlow, Essex, CM20 2DY, UK
Phone: +44 1279 63 55 33
Fax: +44 1279 62 50 29
Email: info.uk@jumo.net
Internet: www.jumo.co.uk

JUMO Process Control, Inc.
6724 Joy Road
East Syracuse, NY 13057, USA
Phone: +1 315 437 5866
Fax: +1 315 437 5860
Email: info.us@jumo.net
Internet: www.jumousa.com

Sliding connection

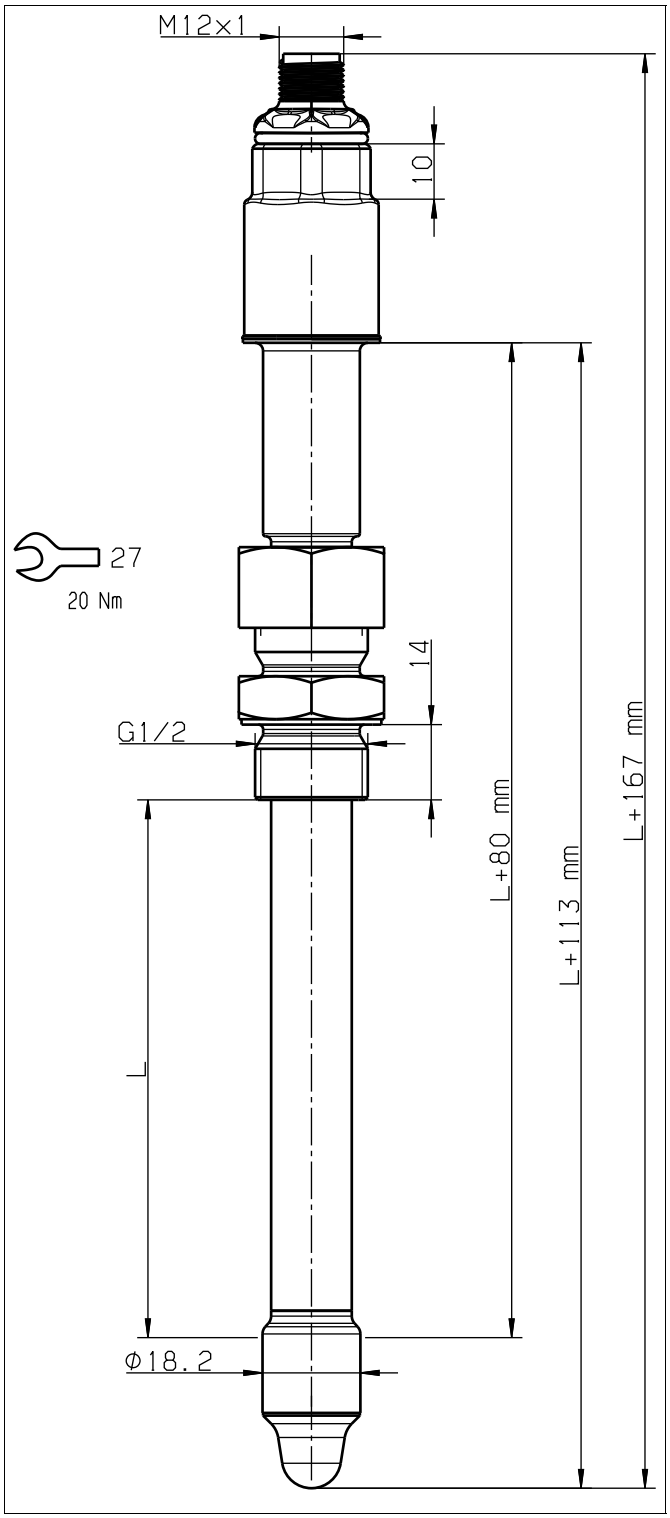

L Length 100 mm or 250 mm

JUMO GmbH & Co. KG
Delivery address: Mackenrodtstraße 14
36039 Fulda, Germany
Postal address: 36035 Fulda, Germany
Phone: +49 661 6003-0
Fax: +49 661 6003-607
Email: mail@jumo.net
Internet: www.jumo.net

JUMO UK LTD
JUMO House
Temple Bank, Riverway
Harlow, Essex, CM20 2DY, UK
Phone: +44 1279 63 55 33
Fax: +44 1279 62 50 29
Email: info.uk@jumo.net
Internet: www.jumo.co.uk

JUMO Process Control, Inc.
6724 Joy Road
East Syracuse, NY 13057, USA
Phone: +1 315 437 5866
Fax: +1 315 437 5860
Email: info.us@jumo.net
Internet: www.jumousa.com

With EHEDG certification

JUMO PEKA – Hygienic process connection

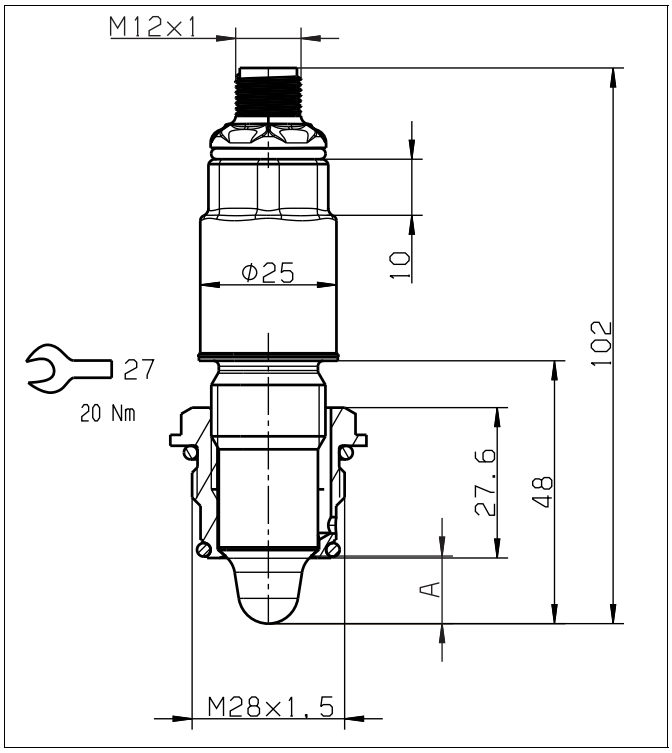

A Immersion depth, PEEK tip 12.5 mm

With EHEDG and 3A certification

G 1/2

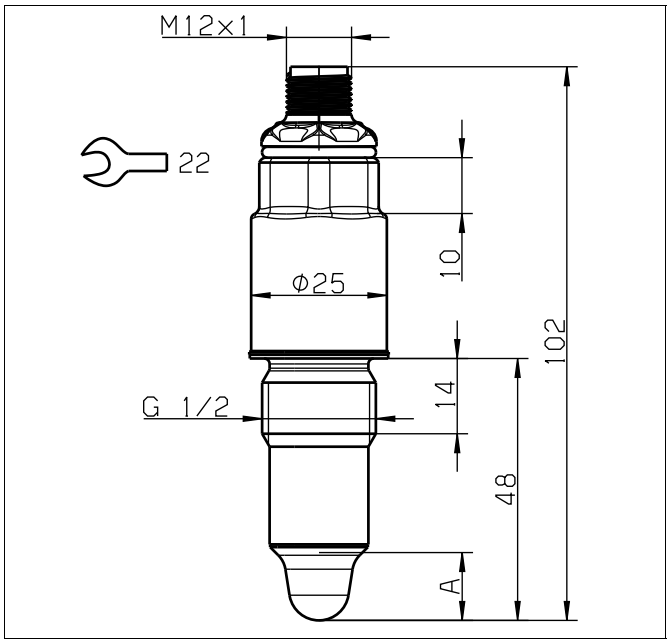

A Immersion depth, PEEK tip 12.5 mm

JUMO GmbH & Co. KG
Delivery address: Mackenrodtstraße 14
36039 Fulda, Germany
Postal address: 36035 Fulda, Germany
Phone: +49 661 6003-0
Fax: +49 661 6003-607
Email: mail@jumo.net
Internet: www.jumo.net

JUMO UK LTD
JUMO House
Temple Bank, Riverway
Harlow, Essex, CM20 2DY, UK
Phone: +44 1279 63 55 33
Fax: +44 1279 62 50 29
Email: info.uk@jumo.net
Internet: www.jumo.co.uk

JUMO Process Control, Inc.
6724 Joy Road
East Syracuse, NY 13057, USA
Phone: +1 315 437 5866
Fax: +1 315 437 5860
Email: info.us@jumo.net
Internet: www.jumousa.com

Connection elements

The connection diagram in the data sheet provides information on product selection.

For the electrical connection, only use the installation instructions or the operating manual.

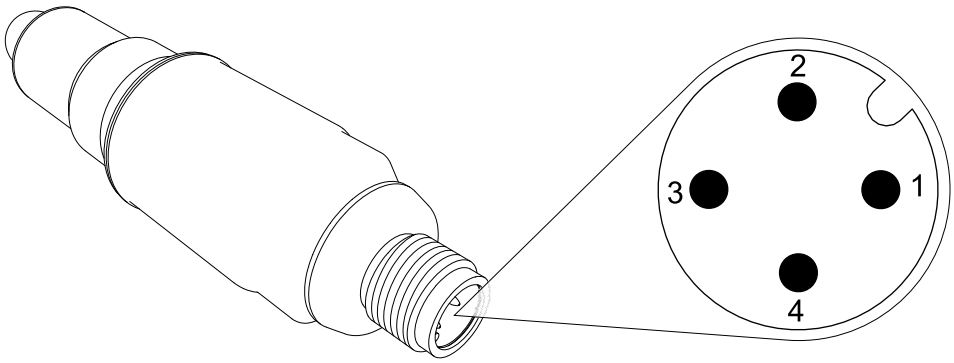

Device M12 plug connector

Terminal assignment

M12 plug connector

Device Connecting cable

Designation	Description	Assignment[a]
IO-Link	L+	1 BN (brown)
	L-	3 BU (blue)
	I/Q = OUT2	2 WH (white)
	C/Q = IO-Link/OUT1	4 BK (black)
PNP	L+	1 BN (brown)
	L-	3 BU (blue)
	OUT2	2 WH (white)
	OUT1	4 BK (black)
NPN	L+	1 BN (brown)
	L-	3 BU (blue)
	OUT2	2 WH (white)
	OUT1	4 BK (black)
push-pull	L+	1 BN (brown)
	L-	3 BU (blue)
	OUT2	2 WH (white)
	OUT1	4 BK (black)

[a] The color coding is only valid for A-coded standard cables!

JUMO GmbH & Co. KG
Delivery address: Mackenrodtstraße 14
36039 Fulda, Germany
Postal address: 36035 Fulda, Germany
Phone: +49 661 6003-0
Fax: +49 661 6003-607
Email: mail@jumo.net
Internet: www.jumo.net

JUMO UK LTD
JUMO House
Temple Bank, Riverway
Harlow, Essex, CM20 2DY, UK
Phone: +44 1279 63 55 33
Fax: +44 1279 62 50 29
Email: info.uk@jumo.net
Internet: www.jumo.co.uk

JUMO Process Control, Inc.
6724 Joy Road
East Syracuse, NY 13057, USA
Phone: +1 315 437 5866
Fax: +1 315 437 5860
Email: info.us@jumo.net
Internet: www.jumousa.com

If connected to a certified intrinsically safe electrical circuit [Ex i] or [Ex t], the following values are given.

Output signal	Max. voltage U_i in V	Max. current U_i in mA	Max. power P_i in mW	Inner inductance in µH	Inner capacitance in nF
PNP	≤ 30	≤ 100	≤ 750	57	35
NPN					
push-pull					

Connection examples

Standard

IO-Link operation with 1 switching output	**Switch operation with 2 switching outputs**
p-switching (PNP)	p-switching (PNP)
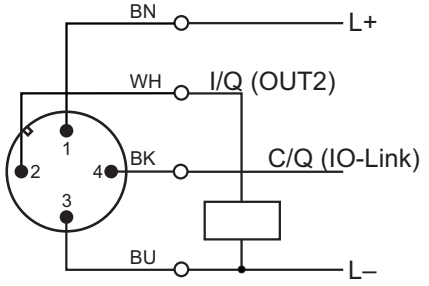	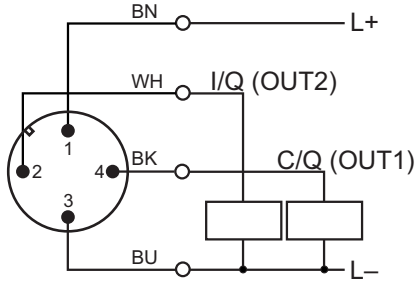
n-switching (NPN)	n-switching (NPN)
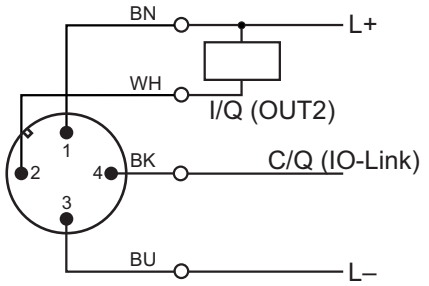	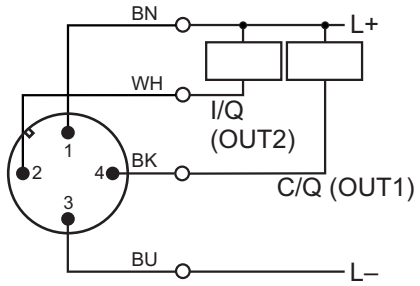

Ex i

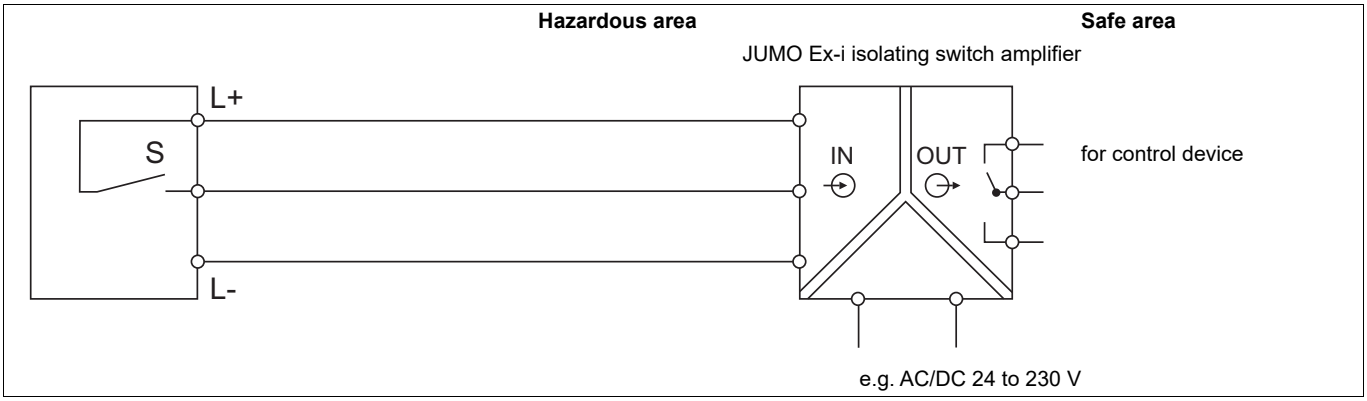

JUMO GmbH & Co. KG
Delivery address: Mackenrodtstraße 14
36039 Fulda, Germany
Postal address: 36035 Fulda, Germany
Phone: +49 661 6003-0
Fax: +49 661 6003-607
Email: mail@jumo.net
Internet: www.jumo.net

JUMO UK LTD
JUMO House
Temple Bank, Riverway
Harlow, Essex, CM20 2DY, UK
Phone: +44 1279 63 55 33
Fax: +44 1279 62 50 29
Email: info.uk@jumo.net
Internet: www.jumo.co.uk

JUMO Process Control, Inc.
6724 Joy Road
East Syracuse, NY 13057, USA
Phone: +1 315 437 5866
Fax: +1 315 437 5860
Email: info.us@jumo.net
Internet: www.jumousa.com

Current limiting for capacitive loads

In the case of capacitive loads, the switching contact (S) must be protected with a resistor.

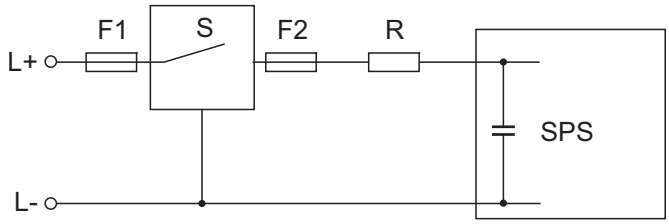

Protective circuit for inductive loads for capacitive loads

In the case of inductive loads, the switching contact (S) must be protected with a flyback diode.

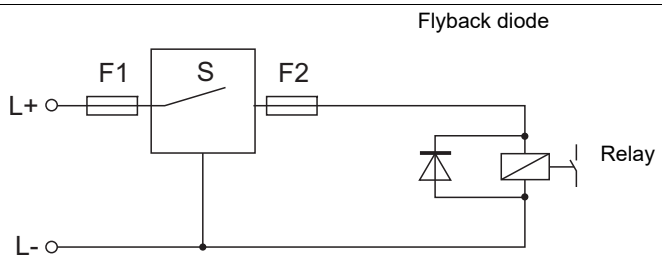

JUMO GmbH & Co. KG
Delivery address: Mackenrodtstraße 14
36039 Fulda, Germany
Postal address: 36035 Fulda, Germany
Phone: +49 661 6003-0
Fax: +49 661 6003-607
Email: mail@jumo.net
Internet: www.jumo.net

JUMO UK LTD
JUMO House
Temple Bank, Riverway
Harlow, Essex, CM20 2DY, UK
Phone: +44 1279 63 55 33
Fax: +44 1279 62 50 29
Email: info.uk@jumo.net
Internet: www.jumo.co.uk

JUMO Process Control, Inc.
6724 Joy Road
East Syracuse, NY 13057, USA
Phone: +1 315 437 5866
Fax: +1 315 437 5860
Email: info.us@jumo.net
Internet: www.jumousa.com

Order details

	(1)	**Basic type**
408401		JUMO ZELOS C01 LS – Capacitive level switch
	(2)	**Basic type extension**
000		None
062		Shipbuilding approval
065		Hygienic design
262		WHG approval
263		WHG approval, explosion protection, intrinsically safe, Ex i
265		WHG approval, explosion protection, intrinsically safe, Ex i, and hygienic design
362		Explosion protection, intrinsically safe, Ex i
365		Explosion protection, intrinsically safe, Ex i, and hygienic design
662		Shipbuilding approval and explosion protection, intrinsically safe, Ex i
	(3)	**Electrical connection**
036		M12 plug connector
	(4)	**Process connection**
105		Fitting G 3/4
133		Fitting M24 × 1.5
360		Sliding connection, G 1/2, 100 mm adjustable
361		Sliding connection, G 1/2, 250 mm adjustable
387		Fitting G 1/2 with PEEK seal
997		JUMO PEKA – Hygienic process connection
	(5)	**Output**
447		Digital (push-pull)
458		IO-Link measured value transmission, including digital output
469		NPN switching output
470		PNP switching output
	(6)	**Medium temperature**
487		-40 to +200 °C
500		-40 to +115 °C
	(7)	**Extra codes**
061		UL approval
374		Acceptance test certificate 3.1 Material DIN EN 10204[a]
634		TAG number
881		Drinking water approval

[a] Not in connection with process connection 360 or 631.

	(1)		(2)		(3)		(4)		(5)		(6)		(7)
Order code		/		-		-		-		-		/	
Order example	408401	/	000	-	036	-	387	-	470	-	500	/	061

Scope of delivery

Device in the ordered version
Operating manual
Protective housing (for device version with explosion protection)

JUMO GmbH & Co. KG
Delivery address: Mackenrodtstraße 14
36039 Fulda, Germany
Postal address: 36035 Fulda, Germany
Phone: +49 661 6003-0
Fax: +49 661 6003-607
Email: mail@jumo.net
Internet: www.jumo.net

JUMO UK LTD
JUMO House
Temple Bank, Riverway
Harlow, Essex, CM20 2DY, UK
Phone: +44 1279 63 55 33
Fax: +44 1279 62 50 29
Email: info.uk@jumo.net
Internet: www.jumo.co.uk

JUMO Process Control, Inc.
6724 Joy Road
East Syracuse, NY 13057, USA
Phone: +1 315 437 5866
Fax: +1 315 437 5860
Email: info.us@jumo.net
Internet: www.jumousa.com

Stock versions

Order code	Part no.
408401/000-036-387-458-500/061	00771685
408401/000-036-387-470-500/061	00778470
408401/062-036-387-470-500/061	00771699
408401/065-036-387-458-500/061	00771693
408401/065-036-387-470-500/061	00771694
408401/362-036-387-470-500/061	00771696

Accessories

Without UL approval

Designation	Part no.
IO-Link master, 1-channel (TMG Device Tool), including mini USB cable for use with Windows® PC	00694070
Configuration cable for Ex devices	30048990
Connection line M12, M12, black, PUR, length 2 m (straight coupling/straight connector; 5 pole; A-coded)	00777804
Line socket, 4-pole, M12 × 1, straight, length 2 m	00404585
Line socket, 4-pole, M12 × 1, angled, length 2 m	00409334
Magnetic pen for teach function	00736330
Flat sealing ring G 1/2, 20 × 26 × 1.5 – Vf	00704484
Flat sealing ring G 3/4, 27.3 × 31.9 × 2 – Vf	30049315
Flat sealing ring M24, 24 × 30 × 2 – Vf	00704485
Welding socket G 1/2, 3A and EHEDG for process connection 380 and 387	30056714
Adapter G 1/2 VARIVENT Type N DN 50/40, EHEDG	30054461
T-piece with PEKA connection DN 100, EHEDG	00643582
T-piece with PEKA connection DN 80, EHEDG	00643581
T-piece with PEKA connection DN 65, EHEDG	00643580
T-piece with PEKA connection DN 50, EHEDG	00643579
T-piece with PEKA connection DN 40, EHEDG	00643576
T-piece with PEKA connection DN 32, EHEDG	00643574
T-piece with PEKA connection DN 25, EHEDG	00643555
T-piece with screw connection G 1/2 DN 100, 3A and EHEDG	00772334
T-piece with screw connection G 1/2 DN 80, 3A and EHEDG	00772333
T-piece with screw connection G 1/2 DN 65, 3A and EHEDG	00772332
T-piece with screw connection G 1/2 DN 50, 3A and EHEDG	00772331
T-piece with screw connection G 1/2 DN 40, 3A and EHEDG	00772330
T-piece with screw connection G 1/2 DN 32, 3A and EHEDG	00772321
T-piece with screw connection G 1/2 DN 25, 3A and EHEDG	00772316
Service deployment	00427970
Preconfiguration (Service)	00427968

JUMO GmbH & Co. KG
Delivery address: Mackenrodtstraße 14
36039 Fulda, Germany
Postal address: 36035 Fulda, Germany
Phone: +49 661 6003-0
Fax: +49 661 6003-607
Email: mail@jumo.net
Internet: www.jumo.net

JUMO UK LTD
JUMO House
Temple Bank, Riverway
Harlow, Essex, CM20 2DY, UK
Phone: +44 1279 63 55 33
Fax: +44 1279 62 50 29
Email: info.uk@jumo.net
Internet: www.jumo.co.uk

JUMO Process Control, Inc.
6724 Joy Road
East Syracuse, NY 13057, USA
Phone: +1 315 437 5866
Fax: +1 315 437 5860
Email: info.us@jumo.net
Internet: www.jumousa.com

With UL approval

Designation	Part no.
Connection line M8/voltage supply, length 2 m, IO-Link master, 4 channel	00767913
Connection line M8/Ethernet, length 2 m, IO-Link master, 4 channel	00767923
Connection line M12/voltage supply, length 2 m, IO-Link master, 8 channel	00767914
Connection line M12/Ethernet, length 2 m, IO-Link master, 8 channel	00767927
IO-Link master, 4-channel – TURCK TBEN-S2-4IOL	00759867
IO-Link master, 8-channel – TURCK TBEN-LL-8IOL	00759875
Cable PUR, 4 × 0.34, black, length 2 m	00776248
Cable PUR, 4 × 0.34, black, length 5 m	00776250
Cable PUR, 4 × 0.34, black, length 10 m	00776252
Connecting cable, M12 plug connection, straight, white, PVC, 10 m, IP68	30059200

Further information and downloads

qr-408401-en.jumo.info